Nakamichi

Service Manual

Nakamichi
High-Com II
Noise Reduction System

CONTENTS

1. **General** 2
2. **Principle of Operation** 3
   - 2. 1. High-Com II Noise Reduction System 3
   - 2. 2. Subsonic Filter 6
   - 2. 3. Power Mute 7
3. **Removal Procedures** 8
   - 3. 1. Top Cover Ass'y 8
   - 3. 2. Bottom Cover Ass'y 8
   - 3. 3. Side Panel Ass'y 8
   - 3. 4. Front Panel Ass'y and Meter Escutcheon 8
   - 3. 5. Main P.C.B. Ass'y 9
   - 3. 6. Power Transformer 9
   - 3. 7. Meter Ass'y, Meter and Lamp P.C.B. Ass'y 9
   - 3. 8. Power Switch 9
   - 3. 9. Rear Panel Ass'y 9
   - 3. 10. 2P Pin Jack and Volume 9
4. **Adjustments and Measurements** 10
5. **Mounting Diagrams** 13
   - 5. 1. Main P.C.B. Ass'y 13
   - 5. 2. Lamp P.C.B. Ass'y 13
6. **Mechanism Ass'y and Parts List** 15
   - 6. 1. Synthesis 15
   - 6. 2. Synthesis Mechanism Ass'y (A01) 16
   - 6. 3. Rear Panel Ass'y (B01) 17
   - 6. 4. Meter Ass'y (B02) 17
7. **Block Diagram** 19
8. **Schematic Diagram** 20
9. **Wiring Diagram** 21
10. **Performance Data** 21
11. **Specifications** 22

1. GENERAL

1.1. Control Functions

The Nakamichi High-Com II control functions are shown below:

1. Peak-Level Meters
2. Mode Switch
3. Filter Switch
4. Output Control
5. Input Level Control
6. Master Input Level Control
7. GND Jack
8. Line Jacks
9. Line In Jacks
10. Rec. Out Cal. Controls
11. Rec. Out Jacks
12. Play In Jacks
13. Play In Cal. Controls
14. Line Out Jacks
15. Power Cord

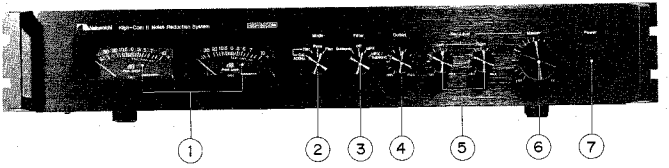

Fig. 1.1 Front View

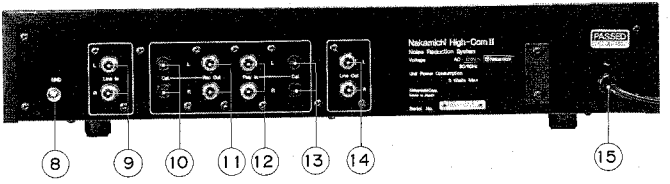

Fig. 1.2 Rear View

1.2. Voltage Selector

Voltage selector is installed on the rear panel for other versions of the Nakamichi High-Com II.
This voltage selector can select either 120 V or 220–240 V at customer's disposal.

2. PRINCIPLE OF OPERATION

2.1. High-Com II Noise Reduction System

The Nakamichi High-Com II is a noise reduction system furnished with peak level meters, a 19 kHz MPX filter, a 10 Hz subsonic filter and a built-in 400 Hz tone oscillator.

Following are the outline of the High-Com II:

(a) Compression (encoding) is made at recording and expansion (decoding) at playing back. The ratio of input to output is 2:1 in compressor, vice versa in expander.

(b) Frequency is divided into two bands of area for the reduction of noise and the noise reduction as a whole is about 20 to 25 dB.

(c) Coloration of sound is eliminated by means of appropriate attack-time or release time.
Further, special measures are taken to keep off breathing disturbance.

Fig. 2.1 shows the block diagram of the High-Com II.

Operation of the High-Com II is done by the Mode Switch and the Filter Switch.

Line input signal is fed through independently separated input level control for L or R channel and simultaneously variable master control for L and R channels and reaches L.P.F.

With this L.P.F., higher frequency over 22 kHz, i.e., the frequency over audible frequency is eliminated.

Next to L.P.F. are a MPX filter and a subsonic filter which permit the selection of 4 different stages of Subsonic, Off, MPX, or MPX/Subsonic with the use of Filter Switch.

At the further stage, it has a compressor or expander composed of U401B ICs and peripheral circuits, that permit the selection of Cal. 400 Hz, Rec. (Encode), Pass, or Play (Decode) with the use of Mode Switch.

At recording, select Rec. with the Mode Switch.

Compressed line input signal will appear at Rec. Out Jacks, while the original signal will appear at peak level meters and at Line Out Jacks.

For playback, select Play with the Mode Switch. Then, the expanded play input signal will appear on both Line Out Jacks and peak level meters.

Preceding input signal will reach L.P.F. and H.P.F. via amp. Frequency is divided into two bands, higher band and lower band, by H.P.F. and L.P.F. respectively, and these two bands are either compressed or expanded by the compressor or the expander.

Compression or expansion is performed by the changes of amplifying rate of amplifier through the VCR (Voltage Control Resistor). The VCR is varied by the level sensor output in correspondence with the input signal level and the frequency.

Following shows the block diagram of the IC U401B.

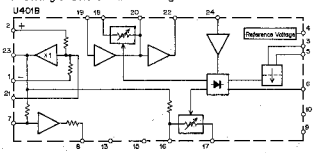

IC U401B Block Diagram

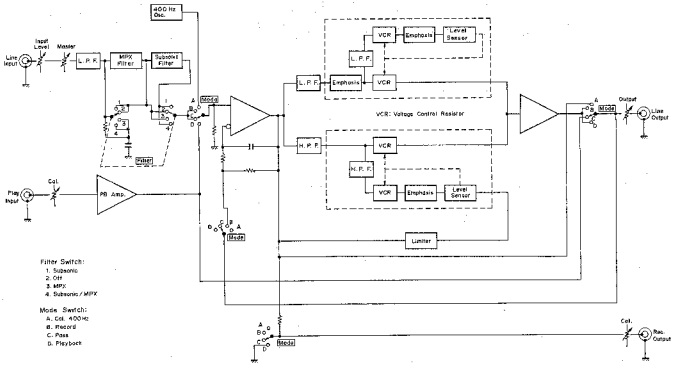

Fig. 2.1 High-Com II Block Diagram

(1) Compressor (Encoding)

Fig. 2.2 is the basic circuit of the compressor.

V1 and V2 are variable gain amplifiers, and they are so designed that each of them keeps the same gains. The gains of V1 and V2 are so made that P2 is always kept at a constant level by the control of the feedback signal sent through the level sensor.

This function is shown in Fig. 2.3.

The gain of V1 and V2, ΔP1 and ΔP2, remains always the same, therefore as seen in the figure, output P1, the thick line, comes out to be 1/2 of the gradient of P0.

For instance, –40 dB input at input P0 will be compressed to –20 dB at output P1.

This compression principle is very simple. If V1 and V2 are equal, then the output P1 will always be 1/2 of the input P0.

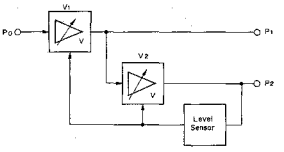

Fig. 2.2

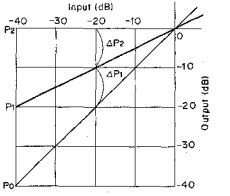

Fig. 2.3

(2) Expander (Decoding)

Fig. 2.4 is the basic circuit of the expander.

Compressed signal is fed to V1′ and V2′ from P1′.

V2′ is similar to V1 and V2 amplifiers of the compressor.

Level sensor and V2′ operate so as to keep output signal level P2′ at a constant level.

Level sensor output is given to V1′ as well. Gain of V1′ is 1/V and therefore the compressed input P1′ will be expanded by V1′, and subsequently the original signal is obtained at output P0′.

This is shown in Fig. 2.5. Output P0′, the thick line, is two times the gradient of P1′. For instance, –20 dB input at input P1′ is expanded to –40 dB at output P0′.

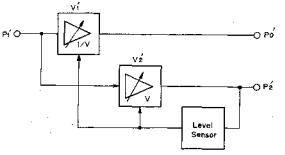

Fig. 2.4

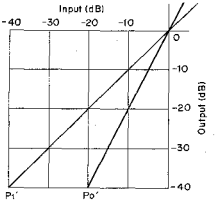

Fig. 2.5

The basic circuit of V1 and V2 of Fig. 2.2 and V2′ of Fig. 2.4 is shown in Fig. 2.6.1. On the other hand, the basic circuit of V1′ is connected as shown in Fig. 2.6.2 in order to obtain the reciprocal of V2′ gain.

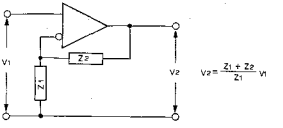

Fig. 2.6.1

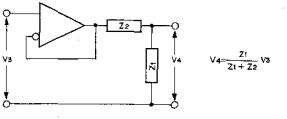

Fig. 2.6.2

Input signal is divided into two bands, each of which is independently separated in performing compression or expansion, and subsequently the modification in noise at the lower band, so called breathing noise, is intercepted. This division of two bands results in noise reduction approximately by 20 dB in both bands, not only in the higher band but also in the lower band as well.

Further, in each of these two bands of frequency, different time constants are used for controlling the amplifying rate so as to reduce the distortion of the middle and lower band and to improve the response at the higher band, preventing the tone quality from deterioration.

Fig. 2.7 indicates the compression characteristics. From this chart you can see the changes of compression level in accordance with the frequency, for instance, less compression to lower frequency and more compression to higher frequency. But you will see the limit at the higher frequency band that *no compression is made below —40 dB.* As the frequency goes up to a higher value, the operating point of compression shifts to the lower level and lowers the recording level at the higher frequency. This is to put the saturation level into consideration at the higher band on the tape deck.

From the chart of the Fig. 2.8, you can read the input level vs output level characteristics of compression and expansion, with the parameter for example 50 Hz, 400 Hz, 3 kHz and 10 kHz.

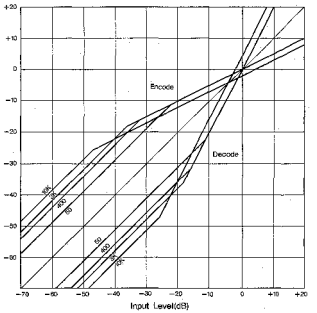

Fig. 2.8 Compression (Encode) and Expansion (Decode) Characteristics

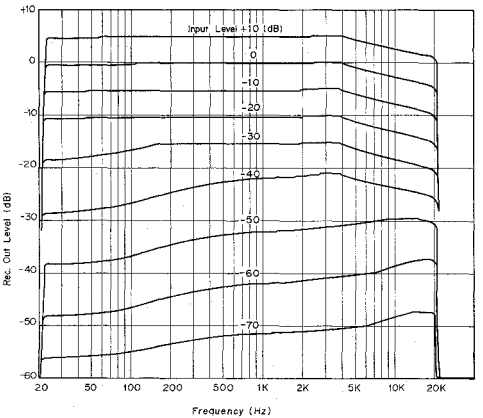

Fig. 2.7 Compression (Encode) Characteristics

2.2. Subsonic Filter

The frequency response of ordinary hi-fi phono cartridges covers the subsonic range. The resonance point is near 10 Hz with a peak of 5 to 15 dB. These factors are determined by the mass, compliances and damping resistance of the cartrige and tone arm. Further, near the resonance frequency, the disc record is likely to be eccentric or warped, or the turntable vibrates abnormally. In extreme cases, the resonance frequency increases to the level of disc record playback signals (the worst condition occurs when the vibration caused by the speaker is fed back to the cartridge via air or floor vibration). Usually, the subsonic effect thus produced is not found. Because of inter-modulation distortion, the subsonic effect causes unclean sound from amplifier, speakers or tape decks. It especially affects such systems whose response curves cover lower frequencies (note that, if the woofer moves unsteadily during playback of disc records, the above-mentioned adverse effect can be produced).

The turntable, cartridge and tone arm must be improved to completely eliminate subsonics. However, even improved turntable, etc. could not completely eliminate subsonics. One solution of this problem so far achieved is using commercially available preamplifiers that incorporate subsonic filters. But most of them shows poor attenuation curves of 6 dB/Oct. or 12 dB/Oct., and they can not sufficiently eliminate subsonics. And they have fault to attenuate the low frequency band (near 30 to 40 Hz). The subsonic filter used in the High-Com II, based on the new active filteration technology, can realize an ideal filter characteristic.

Fig. 2.9 shows the subsonic filter of the High-Com II. The portion represented by FT is generally known as a twin T filter. Its characteristics are illustrated in Fig. 2. 10 (1). As shown, the curve of the twin T filter rapidly drops at 20 to 50 Hz, and attenuation at below 5 Hz is rather small. These demerits have been smartly eliminated by the High-Com II as follows:

Improvement 1: Improved Twin T Filter with Boot Strap

As shown in Fig. 2.9, the output from the twin T filter is amplified by OP-amp. IC302 and taken from its output terminal. This output provides positive feedback to the non-inverting input of IC302 through C107 and R109. This greatly reduces the level down in the range 20 to 50 Hz. For greater attenuation in the range below 5 Hz, R110 is added to lower the load impedance of the filter and to change the impedance of each element so that the asymmetric curve as shown by Fig. 2.10 (2) can be achieved.

Improvement 2: Addition of CR Filter

The curve shown in Fig. 2.10 (2) is satisfactory for the subsonic filter except insufficient attenuation at below 5 Hz.

Besides the High-Com II uses a CR filter consisting of C108 and R112 to achieve a more ideal subsonic filter curve as shown by Fig. 2.10 (4). (In Fig. 2.10 (3) shows the CR filter curve and (4) is a combination of curves (2) and (3).)

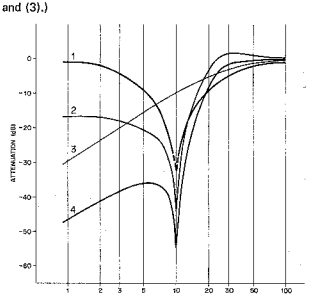

Fig. 2.10

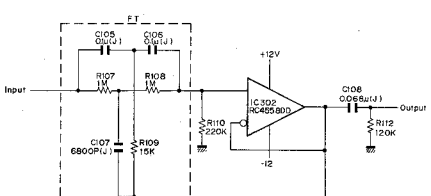

Fig. 2.9 Subsonic Filter Circuit

2.3. Mute Signal

Output signals are muted for a certain time to prevent transient noise when power is ON or OFF. Fig. 2.11 shows the mute circuit and Fig. 2.12 shows a timing chart of the mute signals.

2.3.1. Power ON

Transformer output is rectified through diode D402 and smoothed by capacitor C401. Therefore, positive potential appears at C401 (transistor Q401 base). That is, Q401 is in the cutoff state, while C402 (47 μF) is charged with negative potential through R404 (2.2 MΩ). At the level where the voltage across C402 exceeds Vbe (base-emitter voltage) of Q402, Q402 turns from OFF to ON. As a result, Q403 turns ON and the mute signal is changed from + V to −12 V, releasing the mute state. This means the mute time depends on C402 and R404 after power is ON.

2.3.2. Power OFF

Transformer output becomes zero, as a result of which C401 is charged with negative potential through R403. At the level where the voltage across C401 exceeds Vbe of Q401, Q401 turns from OFF to ON and C402 is quickly discharged. Thus, Q402 is cut off and Q403 is also cut off.

The mute signal voltage becomes positive to mute the output signal. D403 acts to prevent + V from being discharged easily when power is OFF.

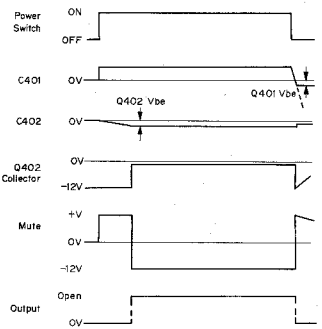

Fig. 2.12 Timing Chart

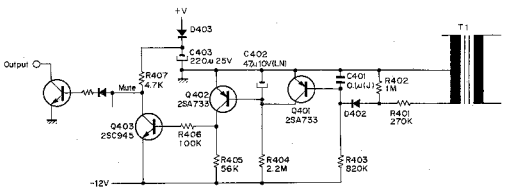

Fig. 2.11 Mute Circuit

3.5. Main P.C.B. Ass'y

Refer to Fig. 3.2.

(1) Refer to Fig. 3.1. Remove Front Panel Ass'y referring to item 3.4.
(2) Remove the connector and wires connected by wrapping from F02 (Main P.C.B. Ass'y).
(3) Remove F01, then disassemble F02 (Main P.C.B. Ass'y).

3.6. Power Transformer

Refer to Fig. 3.2.

(1) Refer to Fig. 3.1. Remove Top Cover Ass'y referring to item 3.1.
(2) Remove F03 and F04, then disassemble F05 (Power Transformer).

3.7. Meter Ass'y, Meter and Lamp P.C.B. Ass'y

Refer to Fig. 3.2.

(1) Refer to Fig. 3.1. Remove Front Panel Ass'y referring to item 3.4.
(2) Remove F06, then disassemble F07 (Meter Ass'y).
(3) Remove F08 (Meter Band), then disassemble F09 (Meter).
(4) Remove F10, then disassemble F11 (Lamp P.C.B. Ass'y).

3.8. Power Switch

Refer to Fig. 3.2.

(1) Refer to Fig. 3.1. Remove Front Panel Ass'y referring to item 3.4.
(2) Remove F12, F13 (Power Switch Flange) and F14, then disassemble F15 (Power Switch).

3.9. Rear Panel Ass'y

Refer to Fig. 3.3.

(1) Refer to Fig. 3.1. Remove Top Cover Ass'y and Bottom Cover Ass'y referring to items 3.1 and 3.2.
(2) Remove F01, then disassemble F02 (Rear Panel Ass'y).

3.10. 2P Pin Jack and Volume

Refer to Fig. 3.3.

(1) Refer to Fig. 3.1. Remove Top Cover Ass'y and Bottom Cover Ass'y referring to items 3.1 and 3.2.
(2) Pull out F03 (Volume Knob). Remove F04 and F05, then disassemble F06 (Volume 10 KΩ(B)) and F07 (Volume 50 KΩ(B)).
(3) Remove F08, then disassemble F09 (2P Pin Jack).

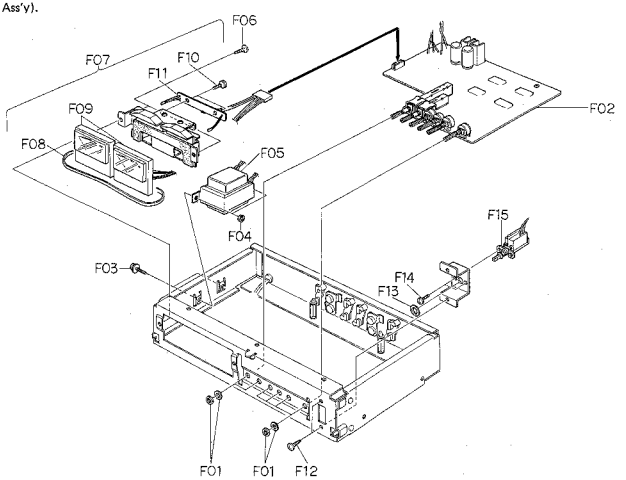

Fig. 3.2

3. REMOVAL PROCEDURES

3.1. Top Cover Ass'y

Refer to Fig. 3.1. Remove F01 and F02, then disassemble F03 (Top Cover Ass'y).

3.2. Bottom Cover Ass'y

Refer to Fig. 3.1. Remove F04, then disassemble F05 (Bottom Cover Ass'y).

3.3. Side Panel Ass'y

Refer to Fig. 3.1. Remove F06 and F07, then disassemble F08 (Side Panel Ass'y).

3.4. Front Panel Ass'y and Meter Escutcheon

(1) Refer to Fig. 3.1. Remove Top Cover Ass'y, Bottom Cover Ass'y and Side Panel Ass'y referring to items 3.1 through 3.3.

(2) Pull out F09 (Volume Knob A Ass'y) and F10 (Volume Knob B Ass'y). Remove F11, then disassemble F12 (Front Panel Ass'y).

(3) Remove F13 (Meter Escutcheon).

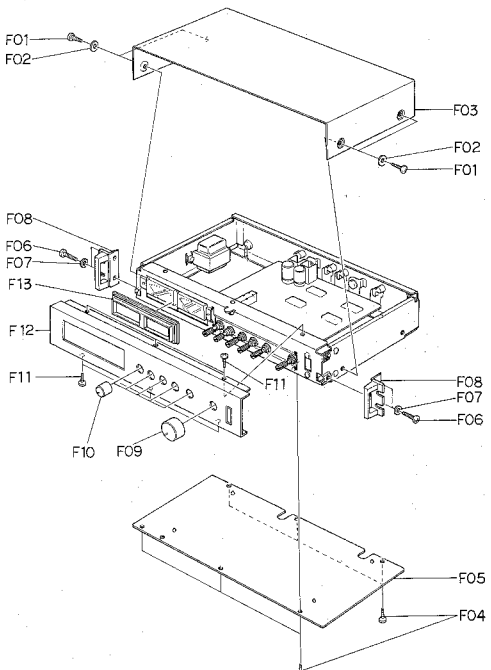

Fig. 3.1

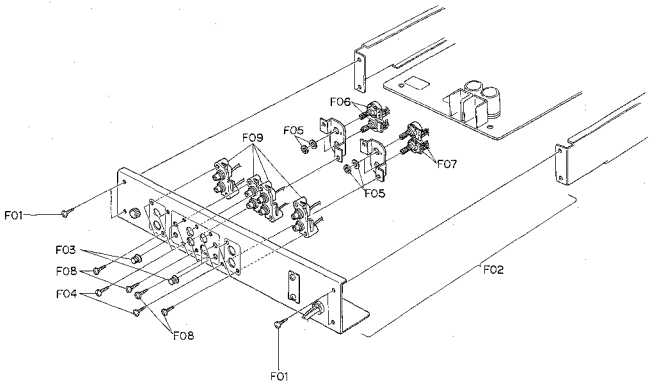

Fig. 3.3

4. ADJUSTMENTS AND MEASUREMENTS

Refer to Fig. 4.1 connecting diagram and Fig. 4.2 diagram for adjustment.

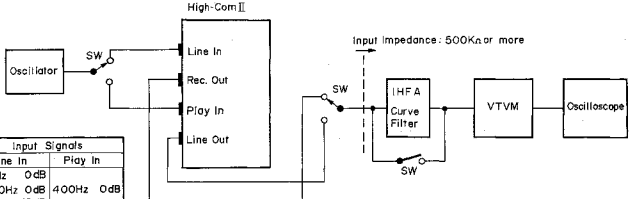

Input Signals	
Line In	Play In
10Hz 0dB	
400Hz 0dB +10dB -60dB	400Hz 0dB
10KHz +10dB -60dB	10KHz -6dB
19KHz 0dB	

Fig. 4.1 Connecting Diagram

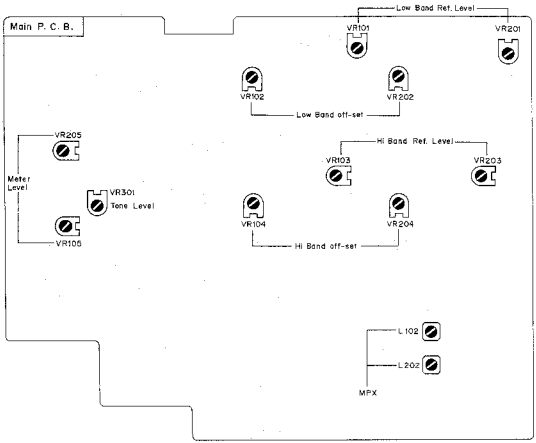

Fig. 4.2 Diagram for Adjustment

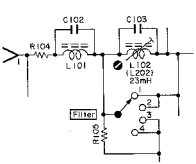

Fig. 4.3 MPX Filter Adjustment

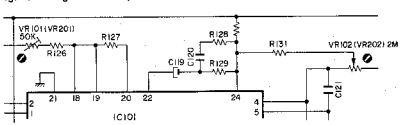

Fig. 4.5 High-Com II Low Band

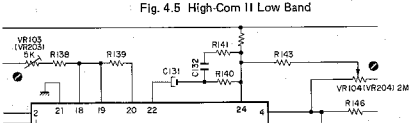

Fig. 4.6 High-Com II High Band

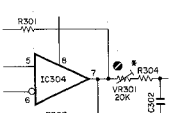

Fig. 4.4 400 Hz Tone Level

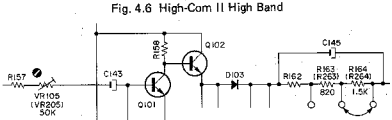

Fig. 4.7 Level Meter Amp.

STEP	ITEM	SIGNAL SOURCE	OUTPUT CONNECTION	MODE	ADJUSTMENT	REMARKS
1	MPX Filter Adjustment	19 kHz ±100 Hz (0 dB) to Line In Jacks	VTVM to Line Out Jacks	Mode SW — Rec. Filter SW — OFF, MPX, and MPX/Subsonic Output Volume — Max. Input Volume — Max. Master Volume — Max.	L102, L202	1. Set Filter Switch to OFF, then adjust the external oscillator output level to obtain 600 mV on the VTVM for both channels. 2. Set Filter Switch to MPX, then adjust coil L102 (L202) to obtain a minimum reading on the VTVM. The minimum reading should be −30 dB or less. 3. Set Filter Switch to MPX/Subsonic, then check to insure that the reading on the VTVM is −30 dB or less for both channels.
2	400 Hz Tone Level Adjustment		VTVM to Line Out Jacks	Mode SW — Cal. 400 Hz Output Volume — Max. Input Volume — Max. Master Volume — Max.	VR301	Adjust VR301 to obtain 600 mV on the VTVM.
3	High-Com II Low Band Adjustment	400 Hz (0 dB) to Play In Jacks	VTVM to Line Out Jacks	Mode SW — Play and Pass Filter SW — OFF Output Volume — Max. Input Volume — Max. Master Volume — Max.	VR101, VR201 VR102, VR202	1. Set Mode Switch to Pass, then adjust the external oscillator output level to obtain 600 mV on the VTVM for both channels. 2. Offset Adjustment of IC U401B: Set Mode Switch to Play, then adjust VR102 (VR202) to obtain a minimum reading on the VTVM. 3. Low Band Reference Level Adjustment: Set Mode Switch to Play, then adjust VR101 (VR201) to obtain 600 mV on the VTVM.
4	Hich-Com II High Band Adjustment	10 kHz (−6 dB) to Play In Jacks	VTVM to Line Out Jacks	Same as above	VR103, VR203 VR104, VR204	1. Set Mode Switch to Pass, then adjust the external oscillator output level to obtain 300 mV on the VTVM for both channels. 2. Set Mode Switch to Play, then adjust VR104 (VR204) to obtain a minimum reading on the VTVM. 3. Set Mode Switch to Play, then adjust VR103 (VR203) to obtain 300 mV on the VTVM.
5	Encoding Characteristics Measurement	400 Hz and 10 kHz (+10 dB, -60 dB) to Line In Jacks	VTVM to Line Out Jacks and Rec. Out Jacks	Mode SW — Rec. and Pass Output Volume — Max. Input Volume — Max. Master Volume — Max.		1. Connect VTVM to the Line Out Jacks. Set Mode Switch to Rec., then feed in 400 Hz and adjust the external oscillator output level to obtain 600 mV on the VTVM for both channels. 2. Connect VTVM to the Rec. Out Jacks. Set Mode Switch to Pass, then note signal levels obtained at the Rec. Out Jacks. These signal levels are referred to as reference levels. 3. Set Mode Switch to Rec. and Rec. Out Cal. Controls on the rear panel at the max. positions (fully CCW). 4. Feed in 400 Hz +10 dB, then check to insure that the reading on the VTVM at the Rec. Out Jack is +5 ±0.5 dB against the reference level for both channels. 5. Feed in 400 Hz −60 dB, then check to insure that the reading on the VTVM at the Rec. Out Jack is −43.0 ±2 dB against the reference level for both channels. 6. Repeat above substeps 1 — 3 at 10 kHz instead of 400 Hz. 7. Feed in 10 kHz +10 dB, then check to insure that the reading on the VTVM at the Rec. Out Jack is +2.2 ±0.5 dB against the reference level for both channels. 8. Feed in 10 kHz −60 dB, then check to insure that the reading on the VTVM at the Rec. Out Jack is −38.5 ±2 dB against the reference level for both channels.
6	Level Meter Amp. Adjustment	400 Hz (0 dB) or 400 Hz Tone to Line In Jacks	VTVM to Line Out Jacks	Mode SW — Cal. 400 Hz and Rec. Output Volume — Max. Input Volume — Max. Master Volume — Max.	VR105, VR205	1. Set Mode Switch to Cal. 400 Hz, then adjust VR105 (VR205) to obtain 0 dB on the level meter. 2. Set Mode Switch to Rec., then feed in 400 Hz −20 dB and adjust R163 (R263) and R164 (R264) to obtain −20 ±2 dB on the level meter. 3. Repeat above substeps 1 and 2 to obtain the optimum performance.
7	Signal to Noise Ratio Measurement		VTVM to Rec. Out Jacks	Mode SW — Pass Output Volume — Max. Input Volume — Min. Master Volume — Min.		1. Set Input Level Control and Master Input Level Control at minimum positions. 2. Check to insure that the reading on the VTVM is −88 dB or less for both channels. Note: The filter of IHF A curve shall be used in the measurements.
8	Subsonic Filter Measurement	10 Hz (0 dB) to Line In Jacks	VTVM to Line Out Jacks	Mode SW — Rec. Filter SW — OFF, Subsonic, and MPX/Subsonic Output Volume — Max. Input Volume — Max. Master Volume — Max.		1. Set Filter Switch to OFF, then adjust the external oscillator output level to obtain 600 mV on the VTVM for both channels. 2. Set Filter Switch to Subsonic, then check to insure that the reading on the VTVM is −30 dB or less for both channels. 3. Set Filter Switch to MPX/Subsonic, then check to insure that the reading on the VTVM is −30 dB or less for both channels.

5. MOUNTING DIAGRAMS

Note: Mounting diagram shows a dip side view of the printed circuit board.

5.1. Main P.C.B. Ass'y

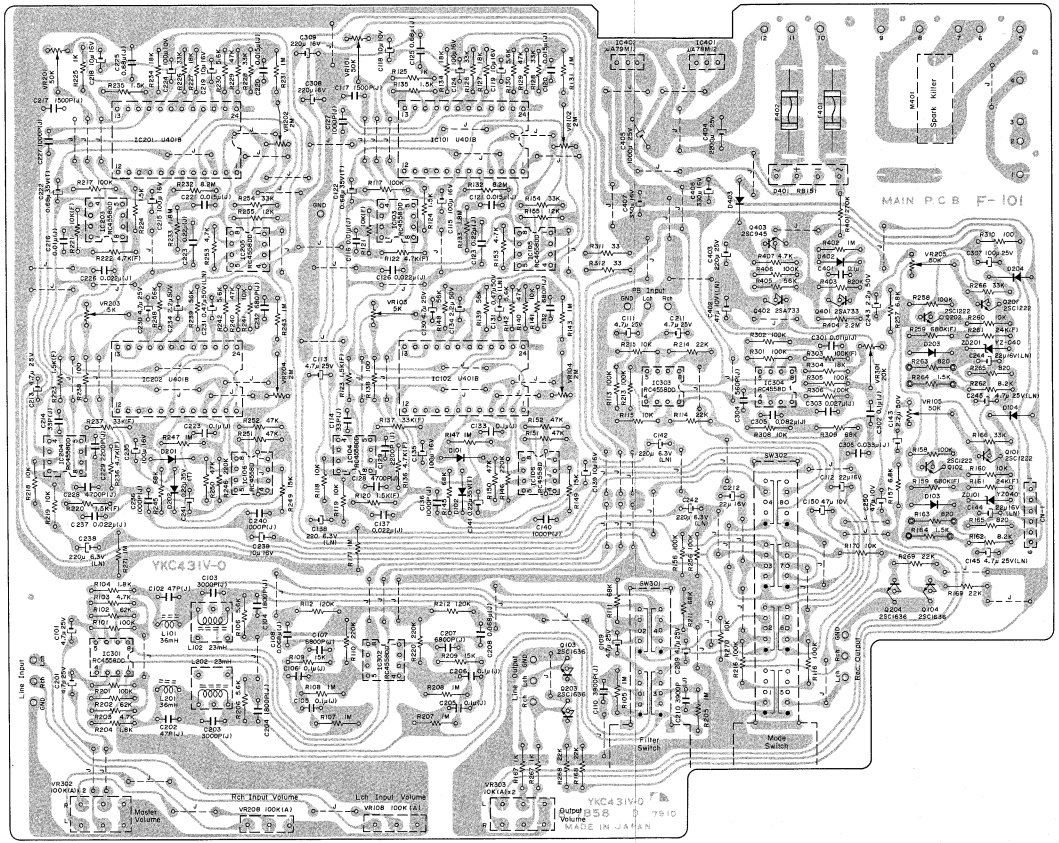

Fig. 5.1

5.2. Lamp P.C.B. Ass'y

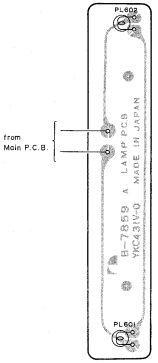

Fig. 5.2

Note: Diode is 1SS53 unless otherwise specified.

Schematic Ref. No.	Part No.	Description
	BA04137A	**Main P.C.B. Ass'y (Japan)**
	BA04138A	**Main P.C.B. Ass'y (U.S.A. & Canada)**
	BA04139A	**Main P.C.B. Ass'y (220V Class 2)**
	BA04140A	**Main P.C.B. Ass'y (UK & Australia)**
	BA04141A	**Main P.C.B. Ass'y (Others)**
	— High-Com II —	
IC101, 102	0B06242A	IC U401B
201, 202		
IC103, 104	0B06146A	IC RC4558DD
105, 203		
204, 205		
IC106, 206	0B06124B	IC RC4558D
D101, 102	0B06181A	Silicon Diode 1SS53
201, 202		
VR101,201	0B07237A	Semi-fixed Volume 50K (B)
VR102,104	0B07306A	Semi-fixed Volume 2M
202,204		
VR103,203	0B03831A	Semi-fixed Volume 5K
R117, 156	0B01889A	Carbon Resistor 100K ERD-25T J
217, 256		
R118, 119	0B01888A	Carbon Resistor 10K ERD-25T J
141, 170		
218, 219		
241, 270		
R120, 123	0B09230A	Metal Film Resistor 1.5K SN14K2E F
220, 223		
R121, 221	0B09203A	Metal Film Resistor 10K SN14K2E F
R122, 136	0B09356A	Metal Film Resistor 4.7K SN14K2E F
222, 236		
R124, 135	0B05698A	Carbon Resistor 1.5K ERD-25T J
224, 235		
R125, 225	0B01857A	Carbon Resistor 1K ERD-25T J
R126, 128	0B05509A	Carbon Resistor 33K ERD-25T J
154, 226		
228, 254		
R127, 134	0B05560A	Carbon Resistor 18K ERD-25T J
227, 234		
R129, 140	0B05641A	Carbon Resistor 47K ERD-25T J
150, 151		
152, 229		
240, 250		
251, 252		
R130, 142	0B01887A	Carbon Resistor 5.6K ERD-25T J
230, 242		
R131, 143	0B05776A	Carbon Resistor 1M ERD-25T J
147, 171		
231, 243		
247, 271		
R132, 232	0B09359A	Metal Film Resistor 8.2M RK14B2E J
R133, 233	0B05680A	Carbon Resistor 1.8M ERD-25T J
R137, 237	0B09357A	Metal Film Resistor 33K SN14K2E F
R138, 238	0B01679A	Carbon Resistor 100 ERD-25T J
R139, 148	0B05508A	Carbon Resistor 56K ERD-25T J
239, 248		
R145, 245	0B05692A	Carbon Resistor 68K ERD-25T J
R146, 246	0B05625A	Carbon Resistor 220K ERD-25T J
R149, 249	0B01683A	Carbon Resistor 15K ERD-25T J
R153, 253	0B01846A	Carbon Resistor 4.7K ERD-25T J

Schematic Ref. No.	Part No.	Description
R155, 255	0B09263A	Carbon Resistor 12K ERD-25T J
R311, 312	0B09210A	Fail Safe Type Resistor 33 RDF25S J
C113, 130	0B01389A	Electrolytic Capacitor 4.7μ 25V
213, 230		
C114, 214	0B09370A	Ceramic Capacitor 33P 50V J
C115, 135	0B01400A	Electrolytic Capacitor 100μ 16V
215, 235		
C116, 216	0B05681A	Mylar Capacitor 0.01μ 50V J
C117, 217	0B05653A	Mylar Capacitor 1500P 50V J
C118, 119	0B01412A	Electrolytic Capacitor 10μ 16V
139, 218		
219, 239		
C120, 121	0B05557A	Mylar Capacitor 0.015μ 50V J
220, 221		
C122, 222	0B09362A	Tantalum Capacitor 0.68μ 35V
C123, 223	0B05584A	Mylar Capacitor 0.22μ 50V J
C124, 224	0B05885A	Electrolytic Capacitor 100μ 10V
C125, 225	0B09360A	Polyethylene Laminate Capacitor
		0.68μ 50V J
C126, 137	0B05582A	Mylar Capacitor 0.022μ 50V J
226, 237		
C127, 136	0B05550A	Mylar Capacitor 1000P 50V J
140, 227		
236, 240		
C128, 228	0B05652A	Mylar Capacitor 4700P 50V J
C129, 229	0B01802A	Mylar Capacitor 2200P 50V J
C131, 231	0B09222A	Electrolytic Capacitor 0.47μ 50V
		(LN)
C132, 232	0B09235A	PP Capacitor 680P 100V J
C133, 233	0B01780A	Mylar Capacitor 0.1μ 50V J
C134, 234	0B05512A	Electrolytic Capacitor 2.2μ 50V
C138, 142	0B09151A	Electrolytic Capacitor 220μ 6.3V
238, 242		(LN)
C141, 241	0B09361A	Tantalum Capacitor 0.22μ 35V
C308, 309	0B01398A	Electrolytic Capacitor 220μ 16V
	0B08699A	IC Socket 24P (4 pcs.)
	— Meter Amp. —	
Q101, 102	0B06062A	Transistor 2SC1222
201, 202		
ZD101,201	0B06063A	Zener Diode YZ040
D103, 104	0B06181A	Silicon Diode 1SS53
203, 204		
VR105,205	0B07237A	Semi-fixed Volume 50K
R157, 257	0B01682A	Carbon Resistor 6.8K ERD-25T J
R158, 258	0B01889A	Carbon Resistor 100K ERD-25T J
R159, 259	0B09358A	Metal Film Resistor 680K SN14K2E F
R160, 260	0B01888A	Carbon Resistor 10K ERD-25T J
R161, 261	0B09005A	Metal Film Resistor 24K SN14K2E F
R162, 262	0B01856A	Carbon Resistor 8.2K ERD-25T J
R163, 165	0B01680A	Carbon Resistor 820 ERD-25T J
263, 265		
R164, 264	0B05698A	Carbon Resistor 1.5K ERD-25T J
R166, 266	0B05509A	Carbon Resistor 33K ERD-25T J
R310	0B09215A	Fail Safe Type Resistor
		100 RDF25S J
C143, 243	0B09372A	Electrolytic Capacitor 2.2μ 50V
C144, 244	0B09137A	Electrolytic Capacitor 22μ 16V (LN)
C145, 245	0B09333A	Electrolytic Capacitor 4.7μ 25V (LN)
C307	0B01272A	Electrolytic Capacitor 100μ 25V

Schematic Ref. No.	Part No.	Description
	— Power Mute —	
IC401	0B06176A	IC μA78M12
IC402	0B06177A	IC μA79M12
D401	0B06183A	Diode Bridge RB151
D402, 403	0B06181A	Silicon Diode 1SS53
Q401, 402	0B06013A	Transistor 2SA733
Q403	0B06100A	Transistor 2SC945
R401	0B05620A	Carbon Resistor 270K ERD-25T J
R402	0B05776A	Carbon Resistor 1M ERD-25T J
R403	0B09320A	Carbon Resistor 820K ERD-25T J
R404	0B05671A	Carbon Resistor 2.2M ERD-25T J
R405	0B05508A	Carbon Resistor 56K ERD-25T J
R406	0B01889A	Carbon Resistor 100K ERD-25T J
R407	0B01846A	Carbon Resistor 4.7K ERD-25T J
C401	0B01780A	Mylar Capacitor 0.1μ 50V J
C402	0B09375A	Electrolytic Capacitor 47μ 10V(LN)
C403	0B01391A	Electrolytic Capacitor 220μ 25V
C404	0B05654A	Electrolytic Capacitor 2200μ 25V
C405	0B01870A	Electrolytic Capacitor 1000μ 25V
C406, 407	0B01502A	Electrolytic Capacitor 330μ 16V
	0B08680B	Heat Sink A (2 pcs.)
	0E00507A	Nut Hex. M3 (2 pcs.)
	0E00612A	Screw M3x6 Philips Pan Head (2A)
		(2 pcs.)
	0B08515A	Insu-Lock (4 pcs.)
	— Miscellaneous —	
	0B07858D	Main P.C.B.
IC301,302	0B06146A	IC RC4558DD
303		
IC304	0B06124B	IC RC4558D
Q103, 104	0B06070A	Transistor 2SC1636
203, 204		
D105, 205	0B06181A	Silicon Diode 1SS53
L101, 201	0B03919B	Inductor 36mH
L102, 202	0B03563A	Inductor 23mH
VR108,208	0B07310A	Volume 100K (A)
VR301	0B07261A	Semi-fixed Volume 20K
VR302	0B07231A	Volume 10K (A) x 2
VR303	0B07309A	Volume 100K (A) x 2
R101, 113	0B01889A	Carbon Resistor 100K ERD-25T J
116, 201		
213, 216		
301, 302		
305, 306		
R102, 202	0B09369A	Carbon Resistor 62K ERD-25T J
R103, 203	0B01846A	Carbon Resistor 4.7K ERD-25T J
R104, 204	0B05614A	Carbon Resistor 1.8K ERD-25T J
R105, 107	0B05776A	Carbon Resistor 1M ERD-25T J
108, 205		
207, 208		
R106, 206	0B01887A	Carbon Resistor 5.6K ERD-25T J
R109, 209	0B01683A	Carbon Resistor 15K ERD-25T J
R110, 210	0B05625A	Carbon Resistor 220K ERD-25T J
R111, 211	0B05692A	Carbon Resistor 68K ERD-25T J
309		
R112, 212	0B05621A	Carbon Resistor 120K ERD-25T J
R114, 168	0B05615A	Carbon Resistor 22K ERD-25T J
169, 214		
268, 269		

Schematic Ref. No.	Part No.	Description
R115, 215	0B01888A	Carbon Resistor 10K ERD-25T J
308		
R167, 267	0B01857A	Carbon Resistor 1K ERD-25T J
R303	0B09305A	Metal Film Resistor 100K SN14K2E F
R304	0B05560A	Carbon Resistor 18K ERD-25T J
C101, 109	0B01389A	Electrolytic Capacitor 4.7μ 25V
111, 201		
209, 211		
C102, 202	0B09242A	Mica Capacitor 47P 50V J
C103, 203	0B09262A	PP Capacitor 3000P 50V J
C104, 204	0B01913A	Mylar Capacitor 1800P 50V J
C105, 106	0B01780A	Mylar Capacitor 0.1μ 50V J
205, 206		
302		
C107, 207	0B05530A	Mylar Capacitor 6800P 50V J
C108, 208	0B05682A	Mylar Capacitor 0.068μ 50V J
C110, 210	0B01804A	Mylar Capacitor 3900P 50V J
C112, 212	0B01862A	Electrolytic Capacitor 22μ 16V
C150, 250	0B01836A	Electrolytic Capacitor 47μ 10V
C301	0B09363A	Mylar Capacitor 0.011μ 50V J
C303	0B09045A	Mylar Capacitor 0.027μ 50V J
C304	0B09323A	PP Capacitor 560P 100V J
C305	0B05685A	Mylar Capacitor 0.082μ 50V J
C306	0B05583A	Mylar Capacitor 0.033μ 50V J
SW301	0B07307A	Rotary Slide Switch F SRZW44N
SW302	0B07308A	Rotary Slide Switch G SRZW84N
CN1	0B08642A	6P-T Post
M401	0B08363A	Spark Killer (Japan)
M401	0B08342A	Spark Killer (U.S.A. & Canada)
M401, 402	0B08445A	Spark Killer (220V Class 2)
M401	0B08240A	Spark Killer (UK & Australia)
M401	0B08240U	Saprk Killer (Others)
F401, 402	0B08344A	Fuse 200mA T 250V (UK, Australia & 220V Class 2)
	0M04112A	Fuse Label 260mA 250V x 2 (UK, Australia & 220V Class 2) (1 pce.)
	0B08349A	Fuse Clip (UK, Australia & 220V Class 2) (4 pcs.)
	BA04174A	**Lamp P.C.B. Ass'y**
	0B07859A	Lamp P.C.B.
	0B08155A	Meter Lamp (2 pcs.)

6. MECHANISM ASS'Y AND PARTS LIST

6.1. Synthesis

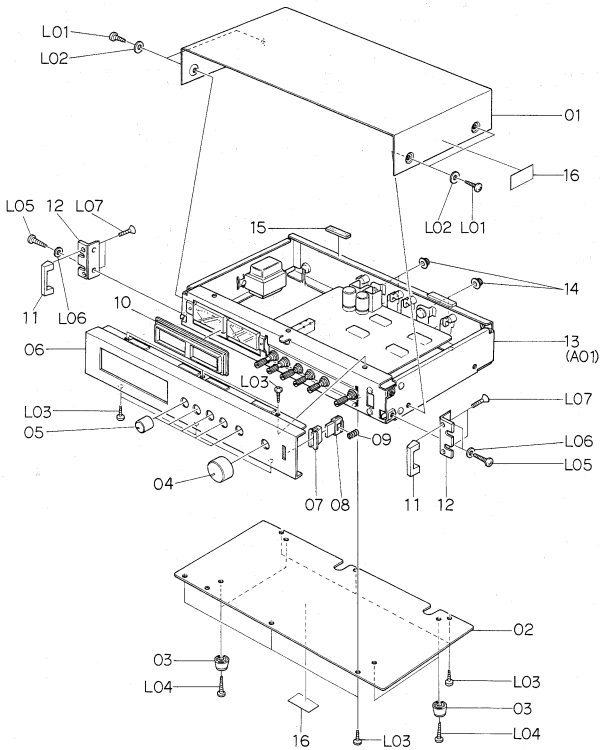

Fig. 6.1

Schematic Ref. No.	Part No.	Description	Q'ty
		Synthesis	
01	0H03799C	Top Cover	1
02	0J04084C	Bottom Cover	1
03	0J03564A	Leg T-H	4
04	0H03732B	Volume Knob A	1
(04)	0H03733A	Volume Knob Sleeve A	1
05	0H03738B	Volume Knob B	5
(05)	0H03739A	Volume Knob Sleeve B	5
06	0H03797B	Front Panel	1
07	0H03791B	Power Switch Knob Escutcheon	1
08	0H03792B	Power Switch Knob D	1
09	0J04075A	Power Switch Knob Spring	1
10	0H03806A	Meter Escutcheon	1
11	0H03800A	Handle	2
12	0H03801A	Side Panel	2
13	JA03634A	Synthesis Mechanism Ass'y (U.S.A. & Canada)	1
	JA03635A	Synthesis Mechanism Ass'y (Japan)	1
	JA03636A	Synthesis Mechanism Ass'y (Others)	1
	JA03637A	Synthesis Mechanism Ass'y (220V Class 2)	1
	JA03638A	Synthesis Mechanism Ass'y (UK)	1
	JA03639A	Synthesis Mechanism Ass'y (Australia)	1
14	0H03296B	Volume Knob	4
15	0H03781A	Cushion	6
16	0M04101A	Caution Label	2
–	0M03551B	Pass Label B	1
–	0M04104B	Serial Number Plate	1
L01	0E00858A	BT Screw M4x6 Philips Binding Head (Black Chromate)	4
L02	0E00736A	Washer 4mm (Black Chromate)	4
L03	0E00860A	BT Screw M3x6 Philips Binding Head (Black Chromate)	12
L04	0E00865A	BT Screw M3x10 Philips Binding Head	4
L05	0E00897A	ST Screw M4x8 Philips Binding Head	4
L06	0E00914A	Washer 4mm (Bronze)	4
L07	0E00891A	Screw M4x6 Philips Countersunk	4
–	0J03644A	Chobert Rivet	2

Schematic Ref. No.	Part No.	Description	Q'ty
A01	JA03634A	**Synthesis Mechanism Ass'y (U.S.A. & Canada)**	1
	JA03635A	**Synthesis Mechanism Ass'y (Japan)**	1
	JA03636A	**Synthesis Mechanism Ass'y (Others)**	1
	JA03637A	**Synthesis Mechanism Ass'y (220 V Class 2)**	1
	JA03638A	**Synthesis Mechanism Ass'y (UK)**	1
	JA03639A	**Synthesis Mechanism Ass'y (Australia)**	1
01	0J04085C	Front Chassis	1
02	HA03892A	Rear Panel Ass'y (U.S.A. & Canada)	1
	HA03893A	Rear Panel Ass'y (Japan)	1
	HA03894A	Rear Panel Ass'y (Others)	1
	HA03895A	Rear Panel Ass'y (220V Class 2)	1
	HA03896A	Rear Panel Ass'y (UK)	1
	HA03897A	Rear Panel Ass'y (Australia)	1
03	0J04090B	Side Chassis L	1
04	0J04091B	Side Chassis R	1
05	BA04138A	Main P.C.B. Ass'y (U.S.A. & Canada)	1
	BA04137A	Main P.C.B. Ass'y (Japan)	1
	BA04141A	Main P.C.B. Ass'y (Others)	1
	BA04139A	Main P.C.B. Ass'y (220V Class 2)	1
	BA04140A	Main P.C.B. Ass'y (UK & Australia)	1
06	BA04147A	Meter Ass'y	1
07	0J04086B	Power Switch Flange	1
08	0J04087A	Power Switch Holder	1
09	0B07253A	Power Switch (U.S.A. & Canada)	1
	0B07271A	Power Switch (Japan)	1
	0B07252A	Power Switch (220V Class 2, UK, Australia & Others)	1
10	0B06627B	Power Transformer (U.S.A. & Canada)	1
	0B06626B	Power Transformer (Japan)	1
	0B06629C	Power Transformer (Others)	1
	0B06628B	Power Transformer (220V Class 2, UK & Australia)	1
11	0B08515A	Insu-lock	7
12	0J04092A	P.C.B. Supporter	2
L01	0E00860A	BT Screw M3x6 Philips Binding Head (Black Chromate)	4
L02	0E00857A	BT Screw M3x6 Philips Binding Head	10
L03	0E00607A	Screw M3x8 Philips Pan Head (3A)	2
L04	0E00507A	Nut Hex. M3	2
L05	0E00502A	Screw M3x5 Philips Pan Head	2

6.2. Synthesis Mechanism Ass'y (A01)

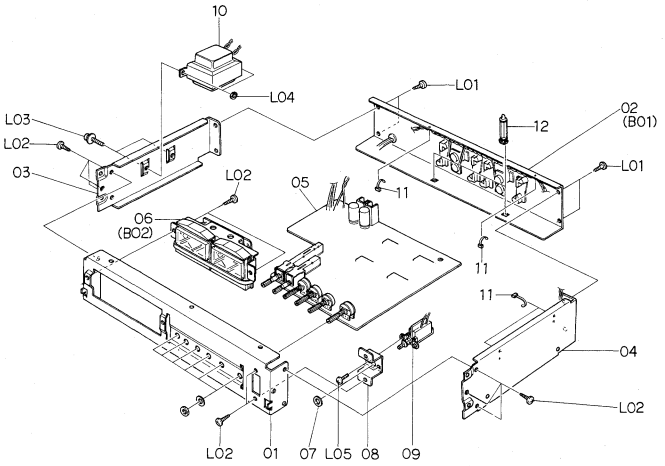

Fig. 6.2

6.3. Rear Panel Ass'y (B01)

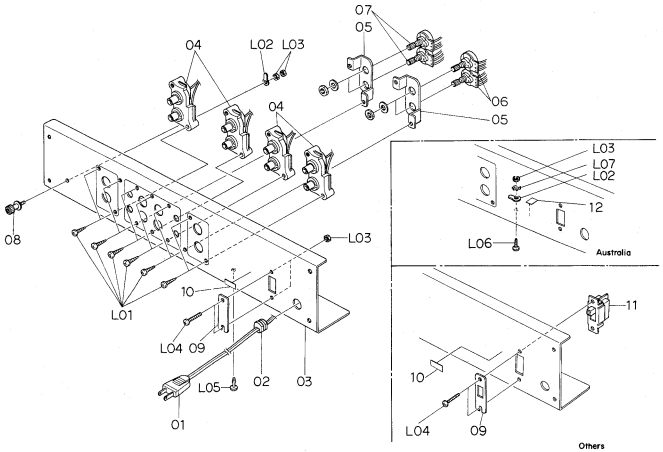

Fig. 6.3

6.4. Meter Ass'y (B02)

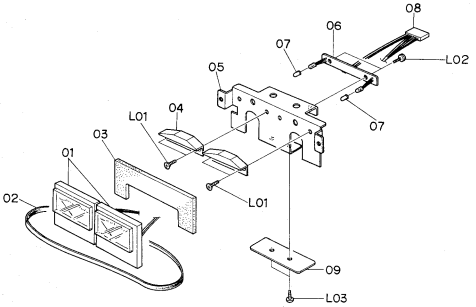

Fig. 6.4

Schematic Ref. No.	Part No.	Description	Q'ty
B01	**HA03892A**	**Rear Panel Ass'y (U.S.A. & Canada)**	**1**
	HA03893A	**Rear Panel Ass'y (Japan)**	**1**
	HA03894A	**Rear Panel Ass'y (Others)**	**1**
	HA03895A	**Rear Panel Ass'y (220V Class 2)**	**1**
	HA03896A	**Rear Panel Ass'y (UK)**	**1**
	HA03897A	**Rear Panel Ass'y (Australia)**	**1**
01	0B08533A	Power Cord (U.S.A., Canada & Others)	1
	0B08219B	Power Cord (Japan)	1
	0B08093U	Power Cord (220V Class 2)	1
	0B08348A	Power Cord (UK)	1
	0B08666A	Power Cord (Australia)	1
02	0B08037U	Cord Bushing C (U.S.A., Canada, Japan, 220V Class 2 & Others)	1
	0B08351A	Cord Bushing 4K-K (UK)	1
	0B08325U	Cord Bushing E (Australia)	1
03	0H03798F	Rear Panel	1
04	0B08362A	2P Pin Jack	4
05	0J04088A	Volume Holder	2
06	0B07312A	Volume 50 kΩ (B)	2
07	0B07311A	Volume 10 kΩ (B)	2
08	0B03920B	Ground Terminal	1
09	0J03663C	Switch Cover C (Except Others)	1
	0M03946A	Voltage Selector Lock Plate (Others)	1
10	0M03794A	Voltage Seal 100V (Japan)	1
	0M03796A	Voltage Seal 220V (220V Class 2)	1
	0M03797A	Voltage Seal 240 (UK & Australia)	1
	0M03955A	Voltage Seal 120V/220-240V (Others)	1
11	0B07092U	Voltage Selector (Others)	1
*12	0M03700A	Ground Mark Label	1
—	0M03959A	File Number Label B (U.S.A. & Canada)	1
—	0M03798A	Nakamichi Label (Japan)	1
—	0M03844A	Power Cord Label (UK)	1
—	0M03705A	Power Cord Label (Australia)	1
—	0F01071A	Free-up Belt	1
L01	0E00860A	BT Screw M3x6 Philips Binding Head (Black Chromate)	12
*L02	0E00174A	Earth Lug B-5	2
*L03	0E00507A	Nut Hex. M3	5
L04	0E00594A	Screw M3x8 Philips Binding Head (Bronze)	2
*L05	0B08583A	Plastic Rivet	1
*L06	0E00593A	Screw M3x6 Philips Binding Head (Bronze)	1
*L07	0E00172A	Washer 3mm Toothed Lock	1

*: Depens on the versions.

Schematic Ref. No.	Part No.	Description	Q'ty
B02	**BA04147A**	**Meter Ass'y**	**1**
01	0B08700D	Meter	2
02	0B08199A	Meter Band	1
03	0J03456B	Meter Cushion	1
04	0J03418A	Lamp House	2
05	0J03455C	Meter Holder	1
06	BA04174A	Meter Lamp P.C.B. Ass'y	1
07	0J04093A	Filter Cover	2
08	0B08701A	6P-H Connector 165	1
09	0J04089B	Insulator (Fiber)	1
L01	0E00505A	Screw M3x6 Philips Countersunk	4
L02	0E00859A	BT Screw M2.6x6 Philips Binding Head	2
L03	0E00612A	Screw M3x6 Philips Pan Head (2A)	2

7. BLOCK DIAGRAM

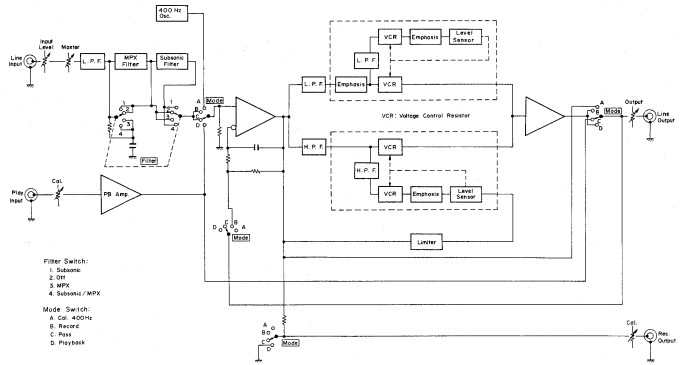

Fig. 7

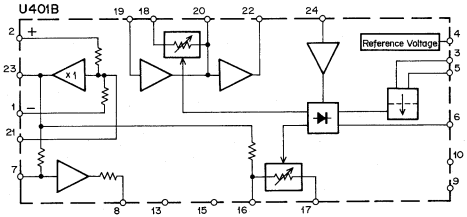

Fig. 8.1 IC U401B

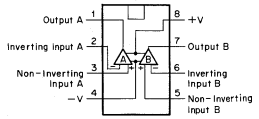

Fig. 8.2 Operational Amp. IC 4558

8. SCHEMATIC DIAGRAM

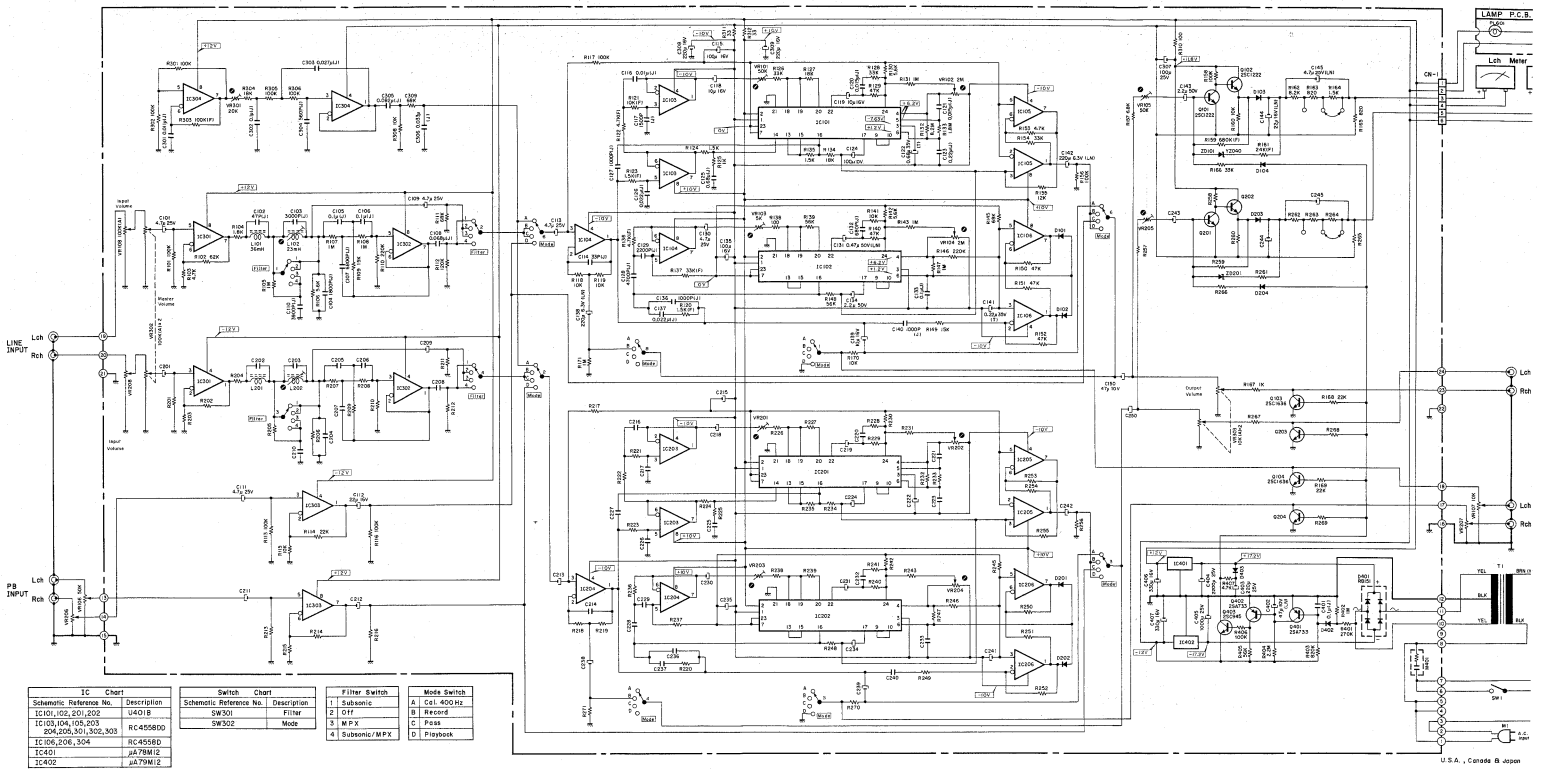

IC Chart	
Schematic Reference No.	Description
IC101,102,201,202	μ4001B
IC103,104,105,203 204,205,301,302,303	RC4558DD
IC106,206,304	RC4558D
IC401	μA78M12
IC402	μA79M12

Switch Chart	
Schematic Reference No.	Description
SW301	Filter
SW302	Mode

Filter Switch	
1	Subsonic
2	Off
3	MPX
4	Subsonic/MPX

Mode Switch	
A	Cal. 400Hz
B	Record
C	Pass
D	Playback

Fig. 8.3 Note: Diode is 1SS53, 1S953, or 1S1555 unless otherwise specified.

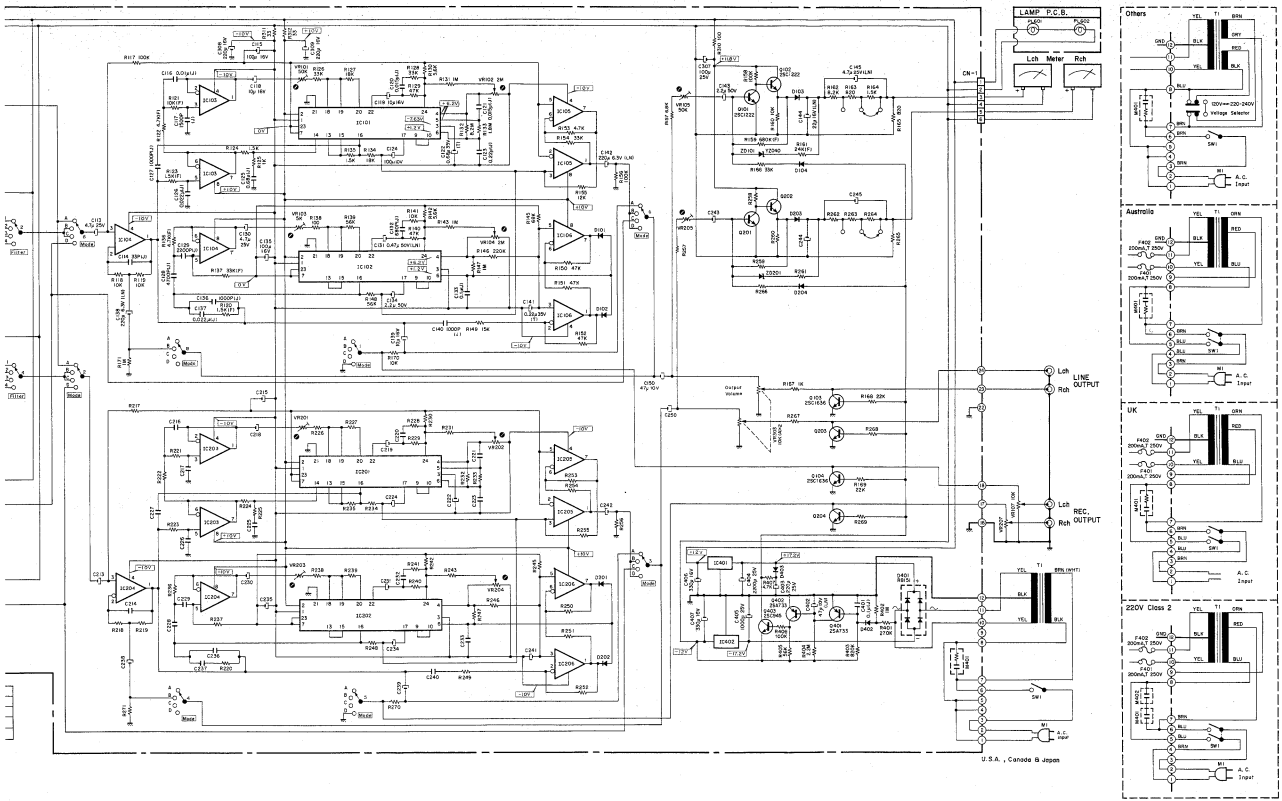

Fig. 8.3 Note: Diode is 1SS53, 1S953, or 1S1555 unless otherwise specified.

9. WIRING DIAGRAM

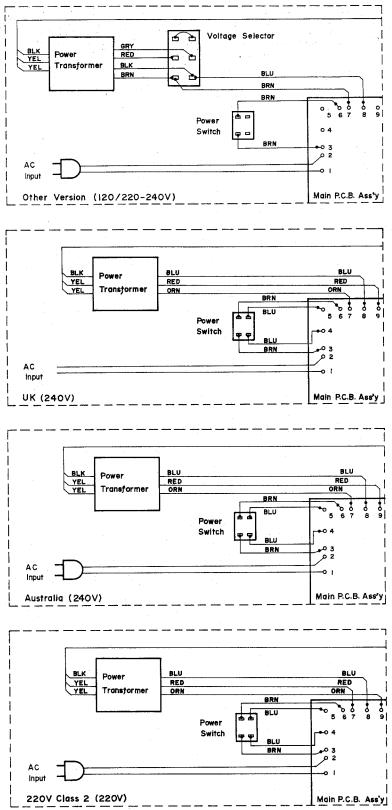

Fig. 9.1

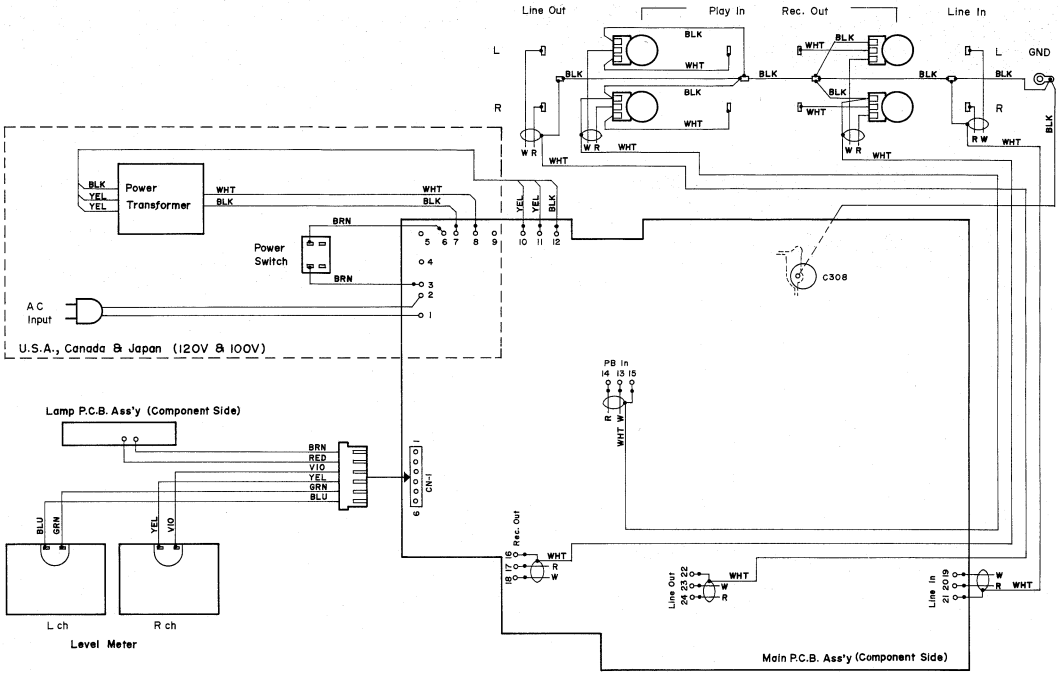

Fig. 9.2

Note: Table of wire colors

BLK – Black	GRY – Gray	BRN – Brown
BLU – Blue	GRN – Green	YEL – Yellow
ORN – Orange	RED – Red	WHT – White

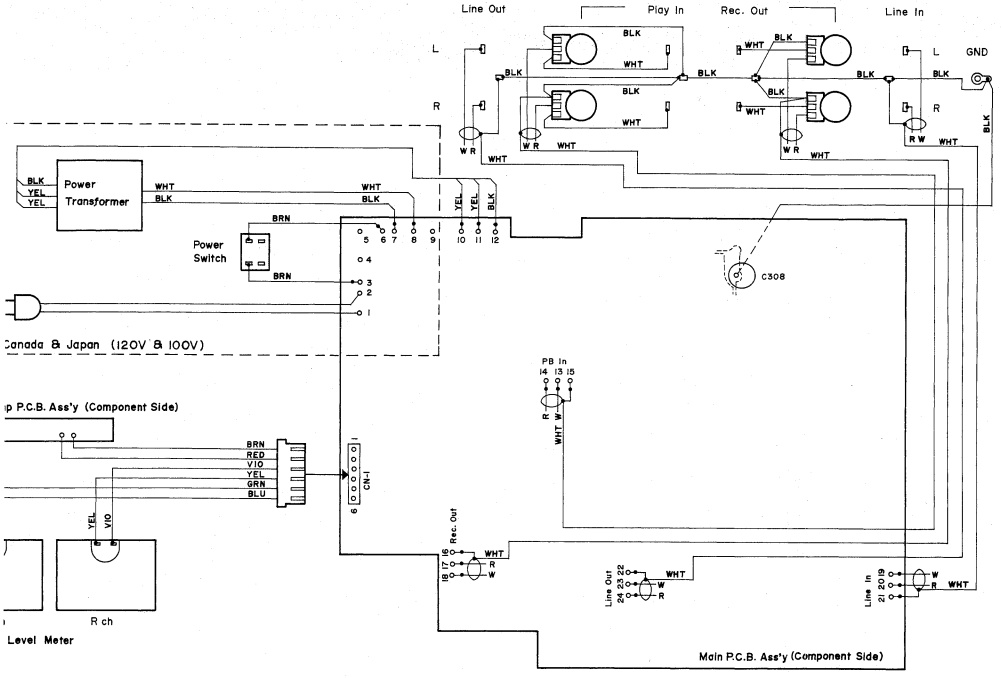

Fig. 9.2

Table of wire colors

BLK – Black	GRY – Gray	BRN – Brown
BLU – Blue	GRN – Green	YEL – Yellow
ORN – Orange	RED – Red	WHT – White

10. PERFORMANCE DATA

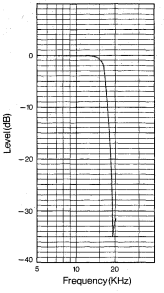

Fig. 10.1 MPX Filter Characteristics

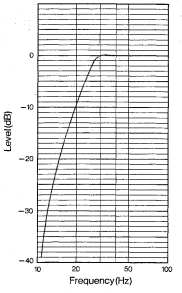

Fig. 10.2 Subsonic Filter Characteristics

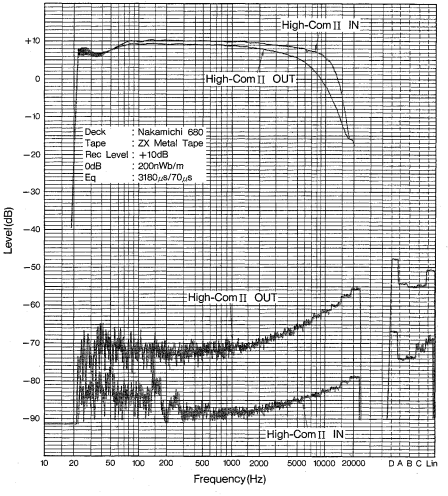

Fig. 10.3 Frequency Response and Noise Analysis

11. SPECIFICATIONS

Noise Reduction System	2-Bands, level encoding and decoding
Compression Ratio	Encoding, 1:2; Decoding, 2:1
Noise Reduction	20 to 25 dB
Distortion	Less than 0.1% (400 Hz Reference Level)
Channel	2 channels
Input	
Line	60 mV 33 k ohms
Playback (From Tape Deck)	200 mV 33 k ohms
Output	
Line	600 mV 1 k ohms
Playback (To Tape Deck)	300 mV 5 k ohms
Frequency Response	20–20,000 Hz ± 1 dB
Power Source	100, 120, 120/220 – 240, 220 or 240 V AC; 50/60 Hz (according to country of sale)
Power Consumption	8 W Max.
Dimensions	482(W) x 82(H) x 270(D) mm 18 - 31/32(W) x 3 - 7/32(H) x 10 - 5/8(D) inches
Approximate Weight	5 kg 11 lb.

- Specifications and appearance of design are subject to change for further improvement without notice.
- The High-Com II has been manufactured under the license from AEG-TELEFUNKEN.
- The High-Com II is the trademark of AEG-TELEFUNKEN.
- Nakamichi Corporation has the right to manufacture the High-Com II and sell the same in the world countries.